PROJECT 13: Design and Analysis of NOT Gate by using Cadence Virtuoso

A Comprehensive Study of Analog Circuits

By: Priya Chaudhary, Astitva Johri and
Bhavya Solanki

Chapters:

List of Figures……..…… 3

1. Introduction …….. 4
2. Brief Description…… 5
3. Circuit Design……. 6-7
   3.1 Schematic Design……... 6
   3.2 Simulation Setup…….. 6
   3.3 Transient Analysis…… 6
4. Simulation Results…….. 8
5. Advantages and Disadvantages…….. 9
   5.1 Advantages……. 9
   5.2 Disadvantages……. 9
6. Conclusion…….. 10
7. Frequently Asked Questions (FAQs)…….. 11

LIST OF FIGURES

Figure 3.1 Symbol of NOT Gate…….…… 7

Figure 3.2 Circuit of NOT Gate…….……..… 7

Figure 4.1 Simulation Results of NOT Gate……..... 8

1. INTRODUCTION

A NOT gate, also known as an inverter, is one of the most fundamental logic gates in digital electronics. It performs a simple operation by inverting its input signal — when the input is high (logic 1), the output is low (logic 0), and when the input is low (logic 0), the output is high (logic 1). The design of a NOT gate is critical as it forms the building block for more complex logic circuits used in microprocessors, memory devices, and other digital systems.

This documentation focuses on the design, simulation, and analysis of a NOT gate using Cadence Virtuoso, a powerful electronic design automation (EDA) tool. Cadence Virtuoso is widely used for designing, simulating, and verifying analog and mixed-signal circuits. It allows designers to model circuit behavior under various conditions, ensuring optimal performance.

The NOT gate is typically realized using MOSFETs, particularly in CMOS technology, which is known for its low power consumption and high-speed operation. Through the schematic design, transient analysis, and performance evaluation, this document will provide a comprehensive understanding of the NOT gate design process and the tools used to analyze its behavior.

2. BRIEF DESCRIPTION

A NOT gate, also known as an inverter, is a fundamental digital logic gate that performs the logical negation operation. It has one input and one output, where the output is the logical complement of the input. If the input is high (logic 1), the output will be low (logic 0), and vice versa. NOT gates are essential components in digital circuits and are commonly used in larger combinational and sequential logic designs.

Characteristics of a NOT Gate:

1. **Single Input and Output**: One input signal and one corresponding output signal.
2. **Symbol**: A triangle with a circle at the output to indicate inversion.
3. **Key Parameters**:
    - Propagation delay
    - Power dissipation
    - Noise margin

3. CIRCUIT DESIGN

3.1 Schematic Design

- **Add components:** PMOS, NMOS, input/output pins, VDD, and GND.
- Connect PMOS and NMOS in a pull-up/pull-down configuration to form a CMOS inverter.
- **Validation**: Run "Check and Save" to ensure the schematic is error-free.

3.2 Simulation Setup

- **Setup Testbench**:

  1. Add a pulse voltage source to the input pin.
  2. Connect load capacitance to the output pin.

3.3 Transient Analysis

- Configure pulse parameters (amplitude, period, rise/fall times).
- Enable transient analysis in ADE and set simulation time.
- Run the simulation and observe waveforms in the viewer.

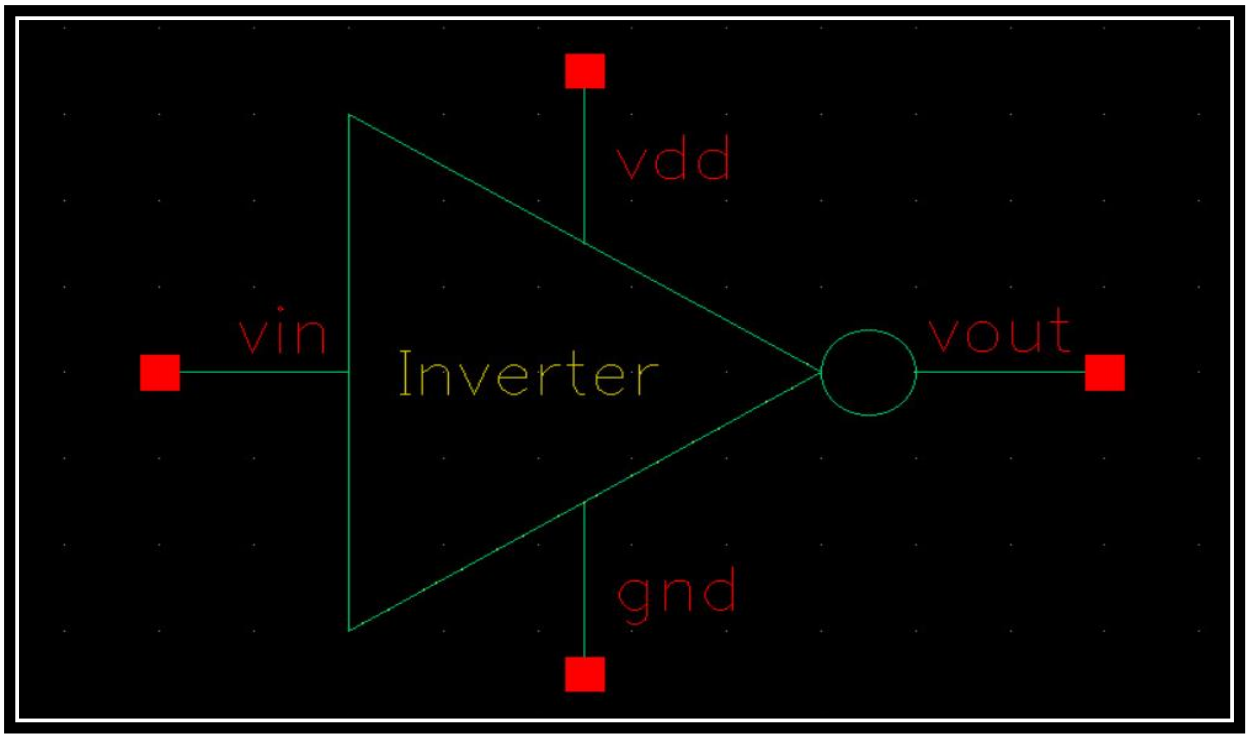

Figure 3.1 Symbol of NOT Gate

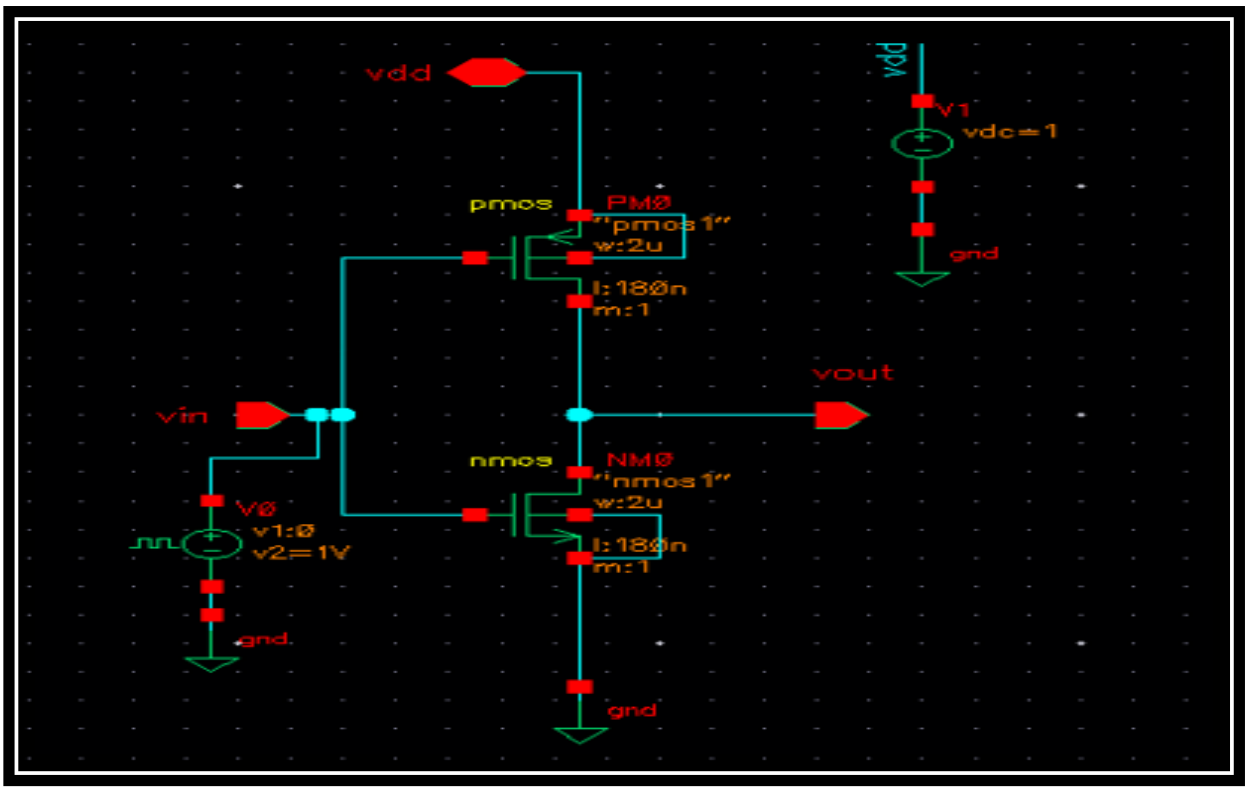

Figure 3.2 Circuit of NOT Gate

4. SIMULATION RESULTS

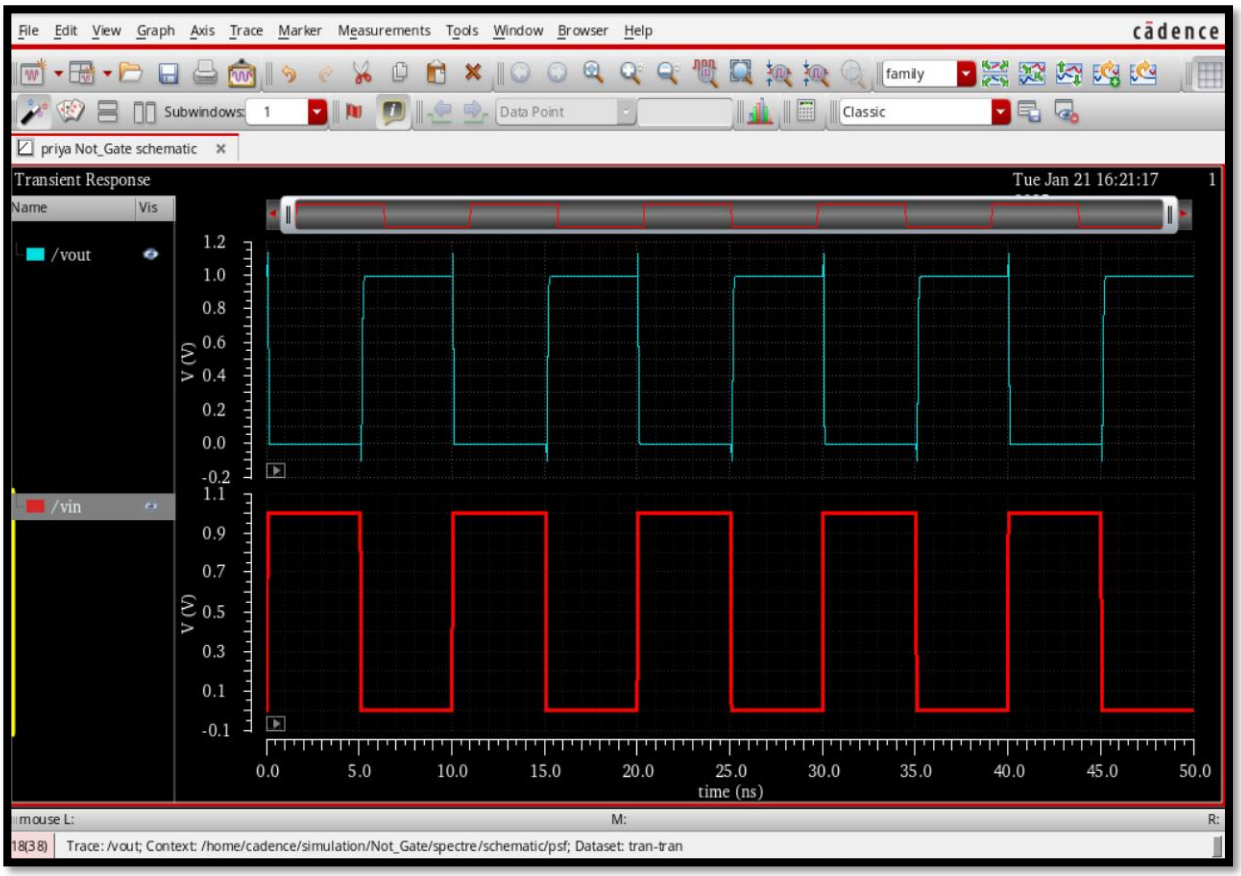

Figure 4.1: Simulation Results of NOT Gate

5. ADVANTAGES AND DISADVANTAGES

5.1 Advantages:-

1. **Simplicity:** The NOT gate is a simple and fundamental building block for creating complex logic circuits.
2. **Fast Switching:** CMOS-based NOT gates exhibit fast switching speeds, making them ideal for high-speed logic circuits.
3. **Low Power Consumption:** CMOS inverters have low static power consumption compared to other logic gates.
4. **Noise Immunity:** CMOS circuits offer better noise immunity, reducing susceptibility to voltage fluctuations.

5.2 Disadvantages:-

1. **Area Consumption:** In CMOS technology, implementing the NOT gate may require more area compared to other gates, especially in large designs.
2. **Speed Limitations:** Although fast, the switching speed can be limited by parasitic capacitances and resistance in large circuits.
3. **Static Power Consumption:** While CMOS is low-power, static power consumption can still exist due to leakage currents, especially at smaller technology nodes.

6. CONCLUSION

The NOT gate, while simple in function, is a fundamental building block in digital electronics. Designing it in Cadence Virtuoso using MOSFETs, particularly the CMOS inverter, highlights its advantages, including low power consumption, high-speed operation, and noise immunity. This exercise provides an excellent opportunity to understand the basics of logic circuits and the principles of efficient circuit design.

Through simulation and transient analysis, key performance parameters such as propagation delay, rise/fall times, and switching behavior can be evaluated. These insights help ensure the circuit operates reliably within larger digital systems, making it suitable for modern high-speed, low-power applications. The use of Cadence Virtuoso simplifies the process of designing and verifying the circuit, enabling precision and accuracy in performance testing.

Despite its limitations, such as layout complexity and limited standalone functionality, the NOT gate is indispensable in creating larger, more complex circuits. The knowledge gained through its design and analysis is foundational for developing advanced digital systems, making this exercise invaluable for understanding modern circuit design methodologies.

7. FREQUENTLY ASKED QUESTIONS (FAQs)

Q1. Why is Cadence Virtuoso used for designing a NOT gate?
Answer: Cadence Virtuoso provides a robust environment for designing, simulating, and analyzing circuits with high precision, enabling designers to study the behavior of the NOT gate under real-world conditions.

Q2: What is the role of CMOS in a NOT gate design?
Answer: CMOS technology improves efficiency, reduces power consumption, and provides high-speed operation by using complementary nMOS and pMOS transistors.

Q3: What does transient analysis reveal about the NOT gate?
Answer: Transient analysis shows how the output responds over time to input changes, helping measure propagation delay, rise time, and fall time.

Q4: What are the key advantages of a CMOS NOT gate?
Answer: It consumes less power, offers faster switching, and has better noise immunity compared to other technologies.

Q5: What are the limitations of a NOT gate?
Answer: A NOT gate provides only signal inversion and requires integration with other gates for complex operations. Additionally, CMOS layouts may consume more area.